VPixx Technologies
Vision Science Solutions

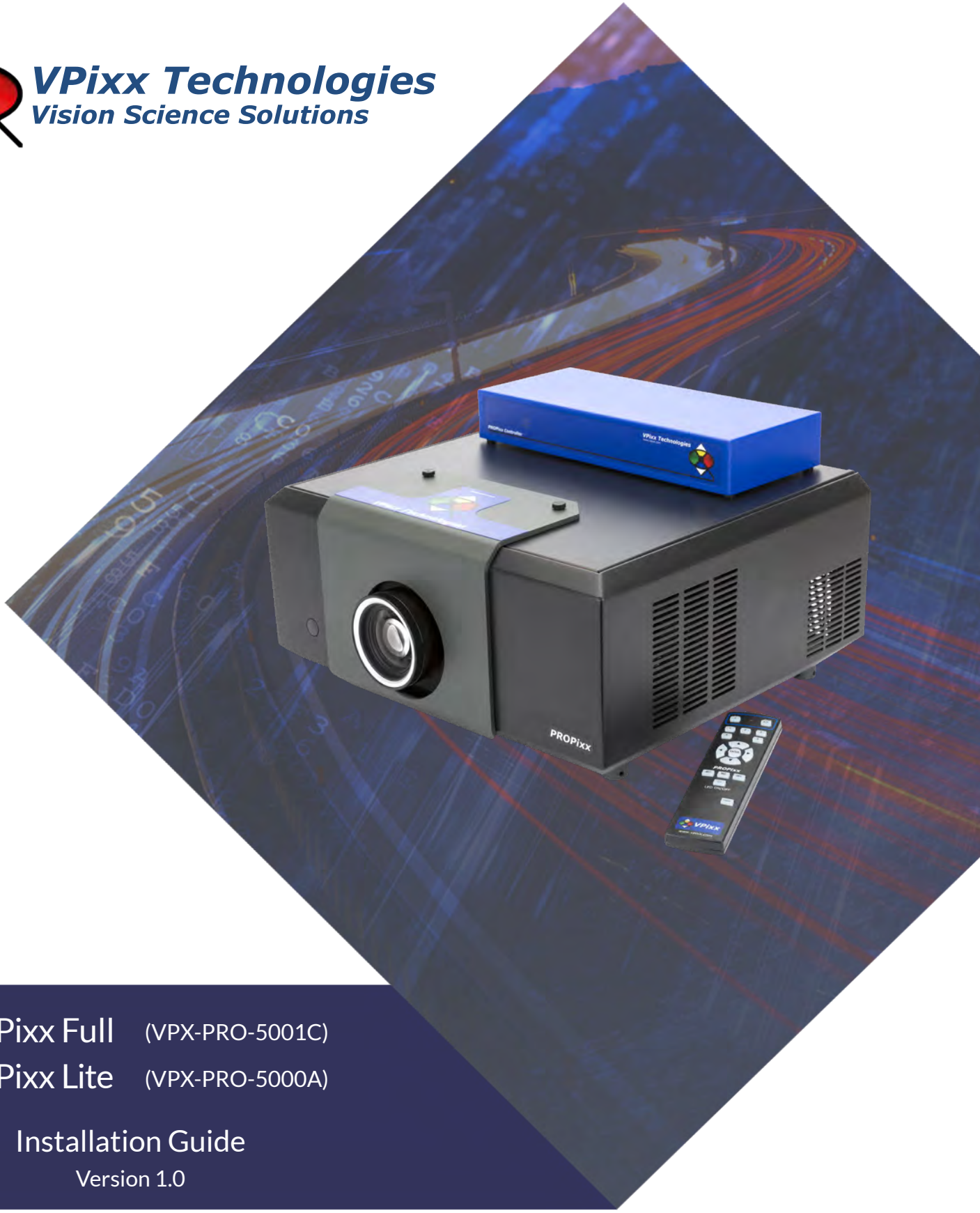

PROPixx Full (VPX-PRO-5001C)
PROPixx Lite (VPX-PRO-5000A)

Installation Guide

Version 1.0

Phone : (514) 328-7499
1 (844) 488-7499 - Toll Free USA/Canada
EMAIL: support@vpixx.com
www.vpixx.com

IMPORTANT

VPixx Technologies Inc. reserves the right to modify or otherwise update this document without notice as required by a constantly evolving marketplace, client requests or to adapt to new progress or constraints in engineering or manufacturing technology. The information contained in this document may change without prior notice.

No part of the written material accompanying this product may be copied or reproduced in any form, in an electric retrieval system or otherwise, without prior written consent of VPixx Technologies Inc.

Product/company names mentioned in this document are the trademarks of their respective owners.

VIEWPixx, DATAPixx, PROPixx, are registered Trademarks of VPixx Technologies Inc.

For more information about our company and products, visit our Web site at ***www.vpixx.com***

For information, comments or suggestions, please contact us by e-mail at ***support@vpixx.com***

Our offices are located at:

630 Clairevue West suite 301
Saint-Bruno, Qc
Canada, J3V 6B4

Version History of this document

Version Updated to	Date	Author	Reason
1.0	2019/07/24	P.Kakos	v1.0 release

Document Icons

The use of icons emphasizes helpful, caution or warning notes. Below is a list of the available icons.

Icon	Type	Description
	Helpful Hint	*Information to help out during assembly, installation or usage*
	Caution Notice	*Important Information to prevent misuse and/or damage to equipment*
	Warning	***Critical information to prevent damage to equipment and/or personnel***

Table of Contents

Copyright © 2020 VPixx Technologies Inc. All Rights Reserved

Table of Figures

Table of Tables

Copyright © 2020 VPixx Technologies Inc. All Rights Reserved

Overview

This manual provides installation and maintenance information for VPixx Technologies Inc.'s PROPixx system.

For technical questions or product support information, do not hesitate to contact the VPixx support team by sending an E-mail at support@vpixx.com or by phone.

By creating your *MyVPixx* account on the VPixx Technologies website, you will have access to additional product documentation, demos, source code examples and the latest firmware and software drivers.

WARNING - SAFETY INFORMATION

- Do not open the cabinet. There are no user serviceable parts inside.
- Use only the power cable included with the PROPixx.
- Ensure that the power outlet includes a Ground connection, as this equipment MUST be grounded.
- Do not expose the projector to rain or moisture, and do not place any liquids on top of the projector.
- Unplug before cleaning. When cleaning, use a damp (not wet) cloth.
- Handle the power cable carefully and avoid sharp bends. Do not use a damaged power cable.
- Do not cover or obstruct the ventilation outlets or inlets.
- Never use strong detergents or solvents such as alcohol or thinners to clean the projector and lens.

Never cover the lens while the projector is switched on. This could pose a fire hazard.

Compliance Information

For European Countries

DECLARATION OF CONFORMITY

Manufacturer's Name: VPixx Technologies Inc.
Manufacturer's Address: 630 Clairevue West suite 301
Saint-Bruno, Qc
Canada, J3V 6B4
Product Name: PROPixx and PROPixx Lite
Part Numbers: VPX-PRO-5001C, VPX-PRO-5000A
Product Options : All
Application of Council Directive:

2014/30/EU	-Electromagnetic Compatibility directive
2015/863/EU	-RoHS directive
2012/19/EU	-Waste Electrical and Electronic Equipment directive

The following harmonised standards have been used:

EN 61326-1:2013 –Electrical equipment for measurement, control and laboratory use.

- **IEC CISPR 11** -Radio frequency disturbance characteristics (Class A)
- **IEC 61000-3-2** -Limits for harmonic current emissions (Class D)
- **IEC 61000-3-3** -Limitation of voltage changes, voltage flicker (≤16A per phase)
- **IEC 61000-4-2** –Electrostatic discharge immunity test (Level 2 contact, air) (Perf Criteria B)
- **IEC 61000-4-3** –Radiated, radio-frequency, electromagnetic field immunity test (Level 2, Perf Criteria A)
- **IEC 61000-4-4** –Electrical fast transient/burst immunity test (Level 2, Perf Criteria B)
- **IEC 61000-4-5** –Surge immunity test (Level 2, Perf Criteria B)
- **IEC 61000-4-6** –Immunity to conducted disturbances, induced by radio-frequency fields (Level 2, Perf Criteria A)
- **IEC 61000-4-8** –Power frequency magnetic field immunity test (Level 2, Perf Criteria A)
- **IEC 61000-4-11** –Voltage dips, short interruptions and voltage variations immunity tests (Perf Criteria B and C)

Supplementary Information:

To remain CE compliant, only CE-compliant parts should be used with this product. Maintaining CE compliance also requires proper cable and cabling techniques. VPixx Technologies will not retest systems or components that have been modified by customers.

Signature: _____

Printed name: Jean-François Hamelin, Eng Title: Vice President

Copyright © 2020 VPixx Technologies Inc. All Rights Reserved

The following information is only for EU member states:

The mark shown to the left is in compliance with the Waste Electrical and Electronic Equipment directive 2012/19/EU (WEEE). The mark indicates the requirement NOT to dispose of the equipment as unsorted municipal waste. For more information call VPixx Technologies Inc. or email us at support@vpixx.com

For the United States of America

This device complies with part 15 subpart B of FCC rules. Its operation is subject to the following two conditions: (1) this device may not cause harmful interference, and (2) this device must accept any interference received, including interference that may cause undesired operation. This equipment has been tested and found to comply with the limits for a Class A digital device, pursuant to part 15 subpart B of the FCC rules.

For Canada

This Class A digital apparatus complies with Canadian ICES-003.

Declaration of RoHS Compliance

RoHS This product has been designed and manufactured in compliance with Directive 2002/95/EC of the European Parliament and the Council on restriction of the use of certain hazardous substances in electrical and electronic equipment (RoHS Directive).

System Overview

Front view of projector and controller

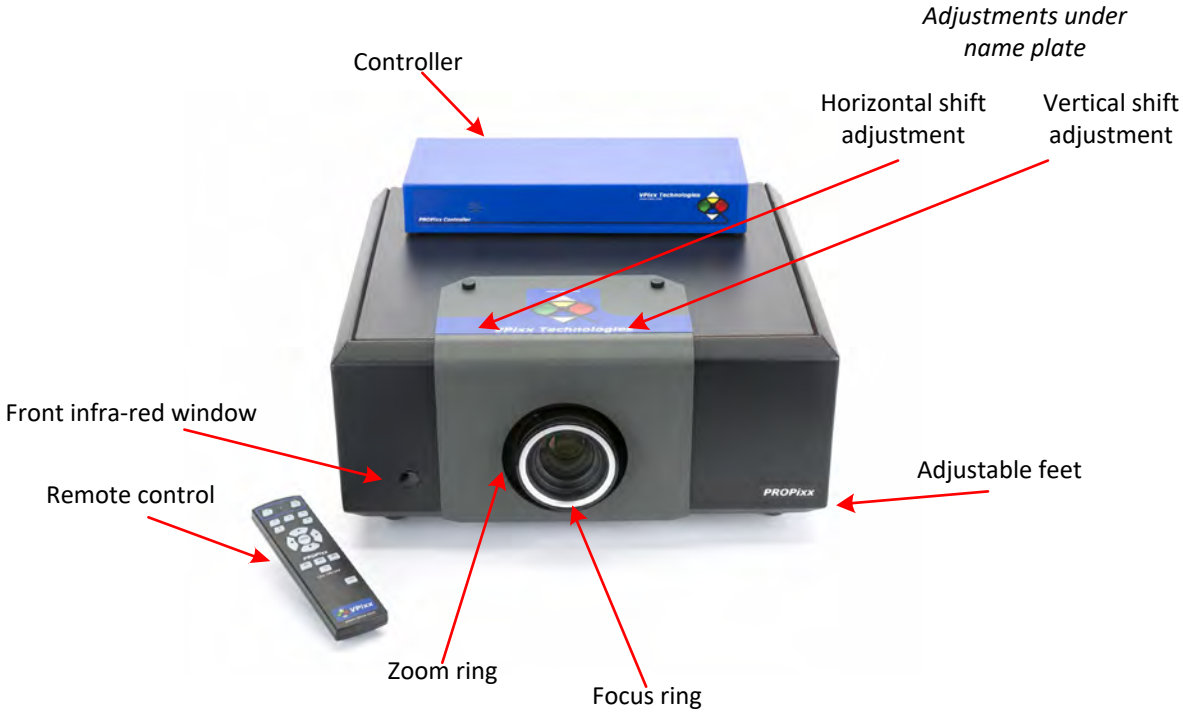

Figure 1 Front view of controller and projector

Rear view of projector

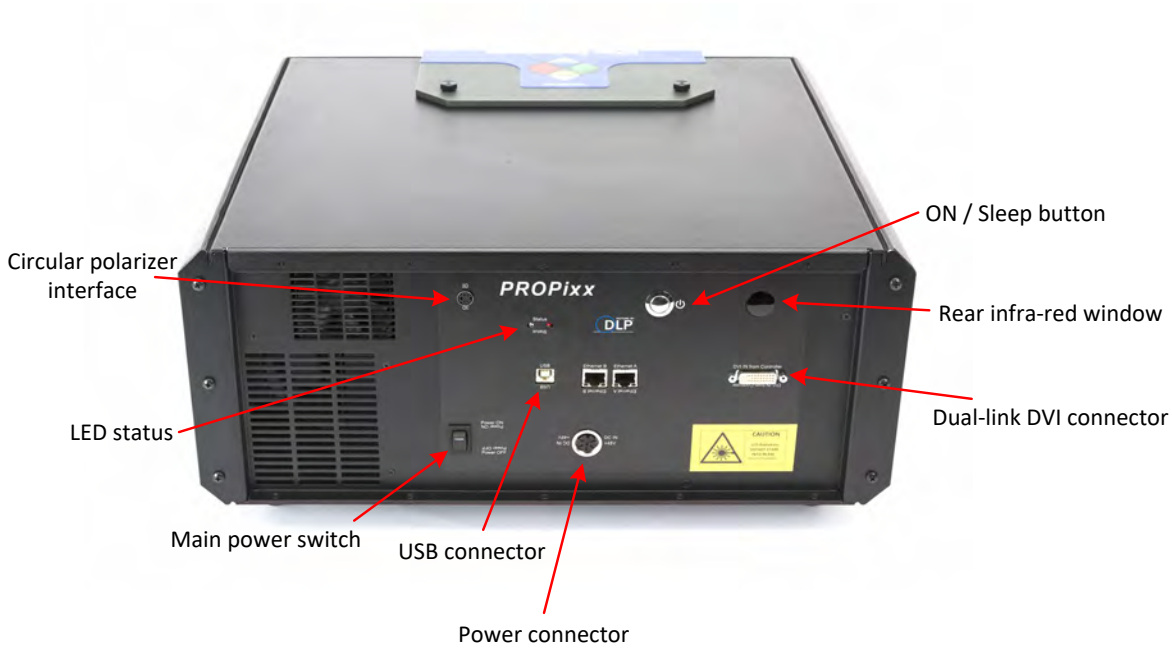

Figure 2 rear view of projector

Copyright © 2020 VPixx Technologies Inc. All Rights Reserved

Rear view of controller

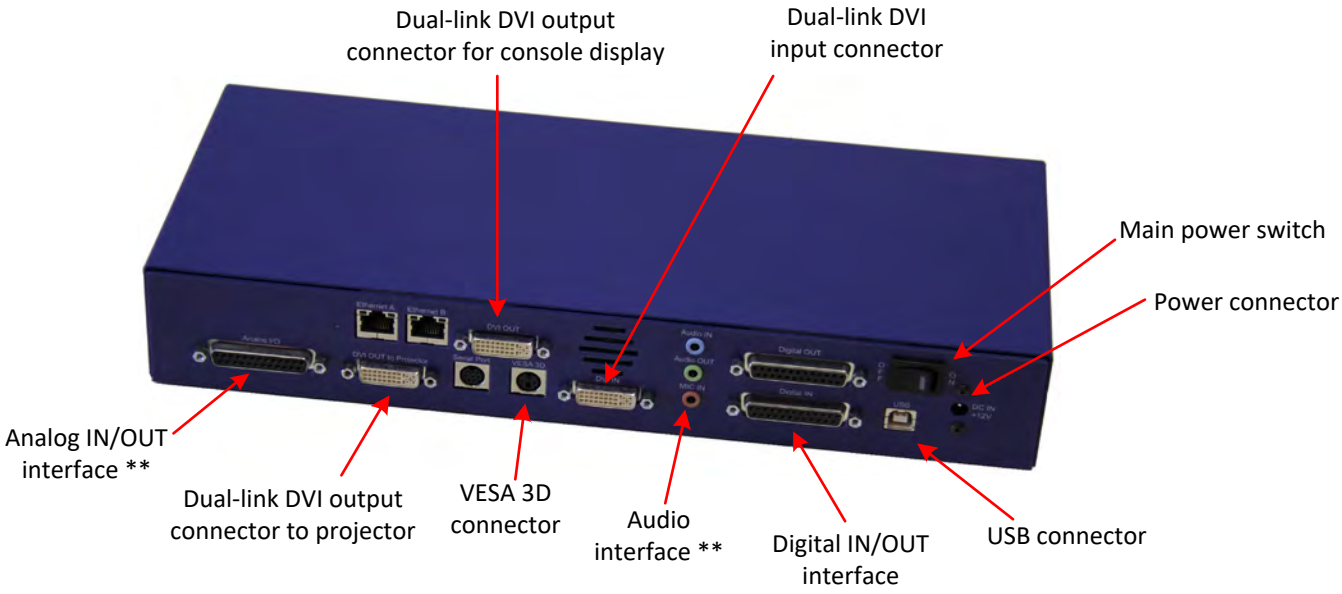

Figure 3 Rear view of controller

****Analog I/O and audio functionalities are available only with PROPixx full version (VPX-PRO-5001C)**

Hardware and software requirements

Graphics Card

The graphics card should have dual-link DVI outputs, or DisplayPort/Thunderbolt outputs (which can be converted to dual-link DVI through an active dongle).

All DisplayPort adaptors are not created equal. The limitation is the 320 MHz video bandwidth which your graphics board can transmit over a dual-link DVI video cable. This is enough bandwidth to generate a full 1920x1200 (or 1080) image at 120 Hz.

We strongly recommend using the following adaptor, which can be obtained from VPixx Technologies or ACCEL Cables.

http://www.accellcables.com/collections/adapters/products/ultraav-displayport-or-mini-displayport-to-dvi-d-dual-link-adapter-with-3d-support

USB 2.0

The host computer requires at least one USB 2.0 interface.

Operating System

The PROPixx is compatible with the following OS: MAC OS X, Windows XP (32bit, 64bit), Windows 7 (32bit, 64bit), Windows 8 (32bit, 64bit) and Linux.

Copyright © 2020 VPixx Technologies Inc. All Rights Reserved

PROPixx installation

You will need a flat, stable area to install your PROPixx. Also, familiarize yourself with the following simple guidelines concerning the installation of your PROPixx system.

- The projector should be installed as close to the power outlet as possible.
- The power connection should be easily accessible, so that it can be disconnected in an emergency.
- Ensure that there is at least 30 cm (12 in) of space between the ventilation outlets and any wall, and 10 cm (4 in) of space for all other sides.
- Do not install the projector close to anything that might be affected by its operational heat (polystyrene ceiling tiles, curtains, etc.)
- When stacking projectors, the stack MUST be vertical, to ensure that the stresses are distributed to all four chassis corners.
- Do not place heavy objects on top of the projector chassis. Only the chassis corners are capable of withstanding the weight of another projector.
- Do not drop or knock the projector.
- Place the projector in a dry area away from sources of dust, moisture, steam, smoke, sunlight or heat.

The projector weighs approximately 15 kg (33 lbs). Use safe handling techniques when lifting the projector. Backup safety chains or wires should always be used with ceiling mount installations.

Never cover the lens while the projector is switched on. This could pose a fire hazard.

Screen size vs throw distance

The *Throw distance* is the distance measured from the front of the projector to the screen. This is an important consideration when it comes to projector installation as it determines whether or not you have enough room to install your projector with the desired screen size, and if your image will be the right size for your screen.

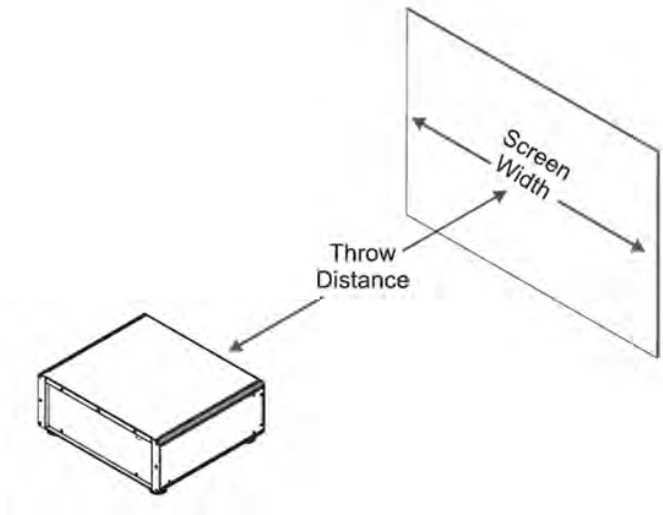

Figure 4 Screen size VS throw distance

Calculating screen width and throw distance

Throw Distance = $Screen\ Width * Lens\ Throw\ Ratio$

Screen Width = $\frac{Throw\ Distance}{Lens\ Throw\ Ratio}$

The available lenses for the projector have the following optical specifications:

Part Number	Lens Type	Throw Ratio	Focus Range (Metric)	Focus Range (Imperial)
VPX-ACC-6501	Super short-throw lens	0.73 : 1	0.97 - 1.3 m	3.18 - 4.27 ft
VPX-ACC-6502	Short-throw lens	1.56 – 1.86 : 1	1.22 - 7 m	4.0 – 23 ft
VPX-ACC-6503	Long-throw lens	1.85 – 2.40 : 1	1.22 - 10 m	4.0 - 32.0 ft
VPX-ACC-6504	Super long-throw lens	2.4 – 4.0 : 1	1.22 - 12 m	4.0 - 39.0 ft
VPX-ACC-6506	Super short-throw lens	0.84 – 1.03 : 1	0.9 – 5.11 m	2.98 – 16.78 ft
VPX-ACC-6507	Super long-throw lens	8.9 – 14.8 : 1	1.52 - 12.19 m	5.0 – 40.0 ft
VPX-ACC-6508	Super long-throw lens	3.3 – 5.94 : 1	1.22 - 12.19 m	4.0 – 40.0 ft
VPX-ACC-6509	Super long-throw lens	6.3 – 11.0 : 1	1.22 - 12.19 m	4.0 – 40.0 ft
VPX-ACC-6510	Super long-throw lens	4.0 – 7.0 : 1	1.22 - 12.19 m	4.0 – 40.0 ft

- The focus range is the distance over which the image can be focused using the focus ring.
- The zoom range is the range over which the throw ratio can be changed using the zoom ring.

Copyright © 2020 VPixx Technologies Inc. All Rights Reserved

Mounting the projector

The four adjustable feet under the chassis allow the projector to be lowered onto a flat surface without any danger of hands being trapped between the chassis and the surface.

Figure 5 Adjustable feet

Ceiling mount

The projector is designed to be used on a flat surface, but it can also be suspended from a ceiling if your application requires it. Three M4 mounting holes with a 0.7 mm pitch are provided under the projector to allow bolting to a ceiling mounting plate.

Before installation, make sure that the surface, ceiling or rigging that is to support the projector is capable of supporting the combined weight of all the projectors.

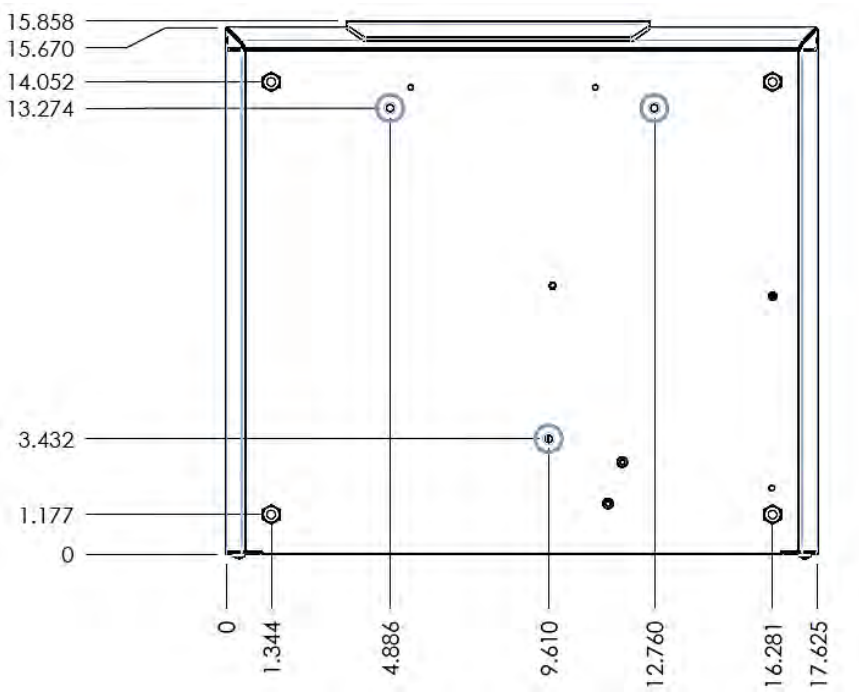

Figure 6 M4 Mounting holes

Level adjustment

If the projector is to be operated from a flat surface such as a projector table, then adjustment of the projector level should be made by turning the four feet under the chassis.

Ideally, the projector should be positioned perpendicular to the screen and the lens shift controls used to align the image with the screen to maintain a geometrically correct image.

Stacking projectors

The projector is capable of supporting the weight of **up to three** other projectors safely. The stack should be positioned vertically and perpendicular to the screen. The lens shift controls can be used to align the image with the screen to maintain a geometrically correct image.

- Carefully lower each projector down onto the previous, making sure that they are vertically aligned with each other. Also, verify that they are not in an area or position where they can be easily tipped over or pushed.
- Align the images from the projectors using the Lens shift controls (see below).

Shifting the image

Ideally, the projector should be positioned perpendicular to the screen. The normal position for the projector is at the center of the screen. However, you can set the projector above or below the center, or to one side, and adjust the image using the Lens shift controls on the top of the projector to maintain a geometrically correct image.

If the projector is fitted with the fixed 0.73:1 lens then there are no mechanical controls for lens shift.

Remove the front cover of the PROPixx.

Figure 7 Front cover

Copyright © 2020 VPixx Technologies Inc. All Rights Reserved

With the name plate removed, use the 5 mm Allen wrench to adjust the horizontal and vertical position of the image.

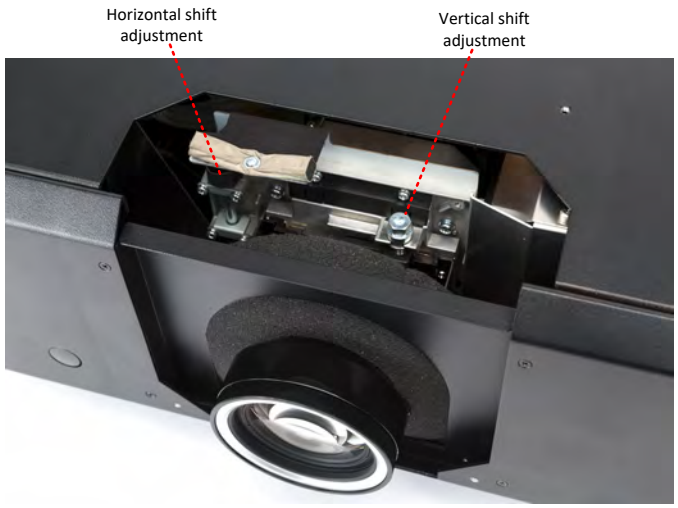

Figure 8 Horizontal and vertical adjustment controls

The image can be shifted by up to:

- ± 0.6 times the height of a full screen image (known as 120% shift)
- ± 0.15 times the width of a full screen image (known as 30%)

It is physically possible to shift the lens further than these limits, but this will result in some distortion of the image beyond the ranges specified above.

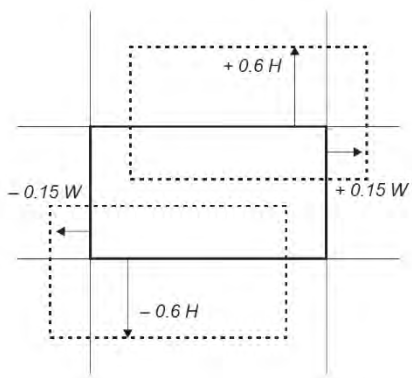

Figure 9 Image shift limits

Adjusting the lens

Zoom

Turn the smooth ring on the lens, closest to the case, to adjust the zoom so that the image fills the screen.

Focus

Turn the knurled ring at the outer end of the lens to adjust the focus until the image is sharp.

Cable installation

1. Connect the USB cable between the projector unit and your computer

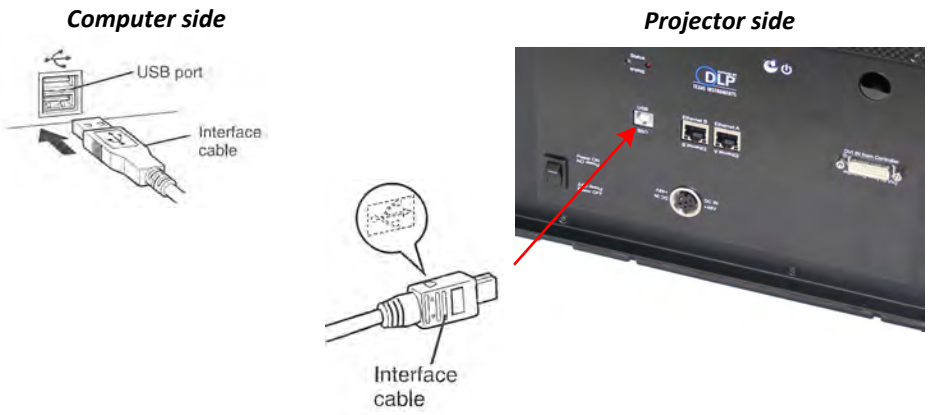

Figure 10 USB cable between projector and computer

2. Connect the USB cable between the controller unit and your computer

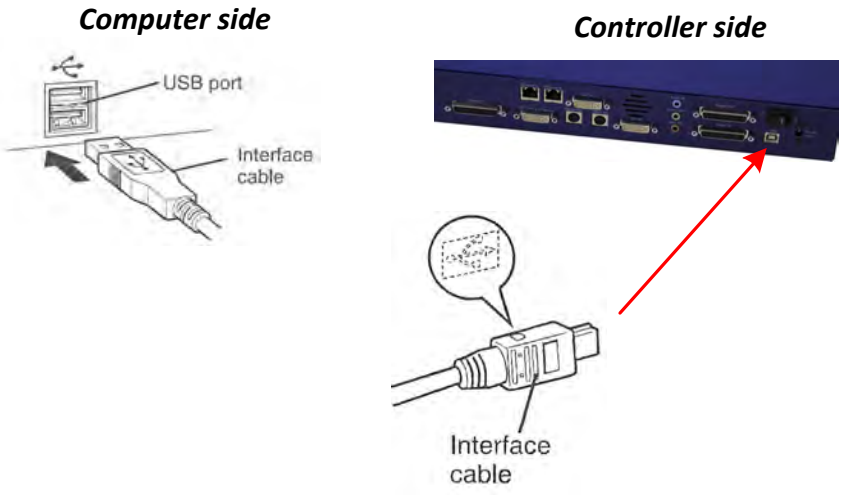

Figure 11 USB cable between controller and computer

3. Connect the DVI cable between the projector and the controller. Be sure to use the ***DVI Out to Projector*** connector on the controller.

Copyright © 2020 VPixx Technologies Inc. All Rights Reserved

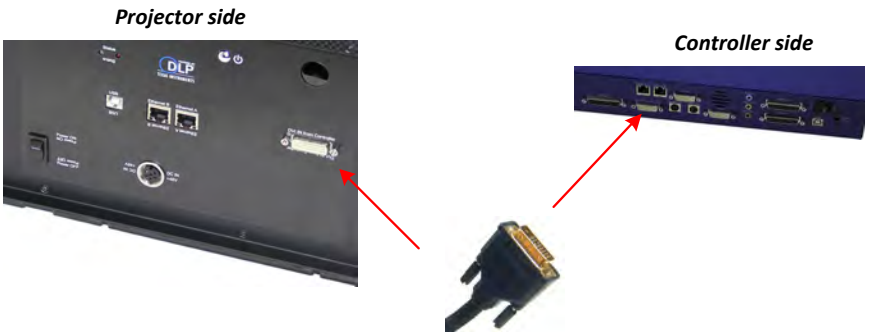

Figure 12 DVI cable between projector and controller

4. Connect the DVI cable between the controller and your computer.

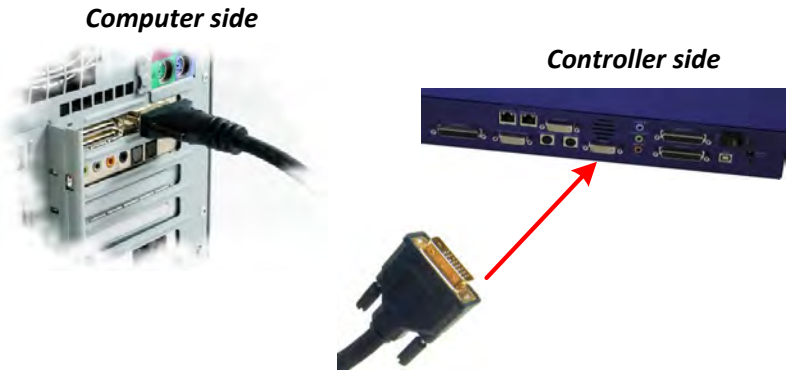

Figure 13 DVI cable between controller and computer

5. Attach the AC adaptor to the projector DC-IN connector

Figure 14 AC adaptor connected to projector's DC-IN connector

6. Attach the AC adaptor to the controller DC-IN connector.

Figure 15 AC adaptor connected to controller's DC-IN connector

Powering the device

Once all cables have been properly connected, you can power on your PROPixx. The power up procedure is as follows:

1. Toggle the controller's power switch to the ON position.
2. On the projector, press the button once to switch the projector ON.

Pressing the projector's button continually for 3 seconds or more will put it in SLEEP mode.

Device detection

After toggling the power switch to ON, your computer should detect the projector and controller and perform the necessary installation. On a Mac OS X system, no driver is required; however under Microsoft Windows, a driver must be installed.

Status LED

Your PROPixx is equipped with two status LEDs that supply information on the energy or power status of your system. The information relayed by each LED, one blue and one red, is summarized in the table below.

Table 1 Status LEDs

	ON	Blinking
BLUE LED	Awake Mode	LED Off mode
RED LED	Sleep Mode	Thermal Shutdown

Copyright © 2020 VPixx Technologies Inc. All Rights Reserved

Remote controller

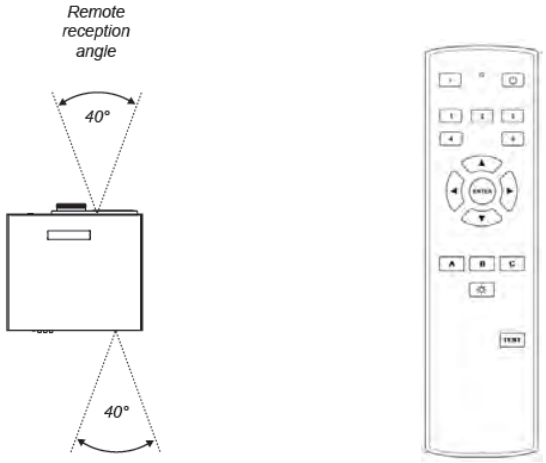

Figure 16 Remote controller

Table 2 Remote controller buttons

Button symbol	Function	Description
I	Power ON	Press POWER ON on the remote control to switch the projector ON
⏻	Power OFF	Press POWER OFF on the remote control to switch the projector to SLEEP mode
☼	LED ON/OFF	Turn ON/OFF LED light source
Other		User defined by software

Inserting batteries into the remote control

Open the battery compartment and insert two AA batteries, ensuring that they are inserted with the orientation shown below.

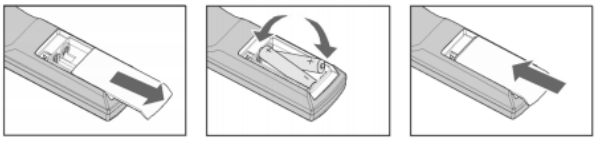

Figure 17 Remote controller battery installation

Installation test pattern

For a perfect installation and screen geometry, use your PROPixx projector in *Test mode*. To enter Test mode, simply press the **TEST** button followed by the **A** button on the remote control. You can do this same sequence for tests B and C.

When in Test mode, press the **TEST** button to return to Normal mode.

Software Installation

For software and driver installation information, please refer to the **VPixx Products Application Guide**.

I/O connector descriptions

Analog I/O connector

The following table shows the analog I/O pin assignment. If you use the analog breakout cable, refer to the associated user manual interconnections.

***Analog I/O functionalities are available only with PROPixx full version (VPX-PRO-5001C)**

Table 3 Analog I/O

Pin	Description	Pin	Description
1	ADC0	14	ADC1
2	ADC2	15	ADC3
3	ADC4	16	ADC5
4	ADC6	17	ADC7
5	ADC8	18	ADC9
6	ADC10	19	ADC11
7	ADC12	20	ADC13
8	ADC14	21	ADC15
9	REF0	22	REF1
10	GND	23	+5 VDC **
11	DAC0	24	DAC1
12	DAC2	25	DAC3
13	GND	Shield *	

Connector type: D-SUB, 25 pins
Gender: Female

* Shield is tied to the GND by a 0 Ohm resistor inside the PROPixx controller.
** Current limited (400mA).

VESA 3D connector

Use this interface to connect your VESA 3D glasses. The following table shows the VESA 3D pin assignment.

Table 4 VESA 3D

Pin	Description
1	+5 VDC **
2	GND
3	VESA_LR (+5 VDC)
Shield *	

Connector type: Mini-DIN, 3 pins
Gender: Female

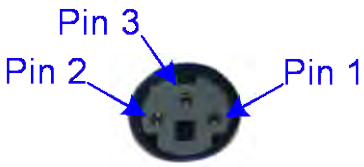

* Shield is tied to the GND by a 0 Ohm resistor inside the PROPixx controller.
** Current limited (400mA).

Copyright © 2020 VPixx Technologies Inc. All Rights Reserved

Digital output connector

The following table shows the digital output pin assignment.

Table 5 Digital Output

Pin	Description	Pin	Description
1	Digital Out 0	14	Digital Out 1
2	Digital Out 2	15	Digital Out 3
3	Digital Out 4	16	Digital Out 5
4	Digital Out 6	17	Digital Out 7
5	Digital Out 8	18	Digital Out 9
6	Digital Out 10	19	Digital Out 11
7	Digital Out 12	20	Digital Out 13
8	Digital Out 14	21	Digital Out 15
9	Digital Out 16	22	Digital Out 17
10	Digital Out 18	23	Digital Out 19
11	Digital Out 20	24	Digital Out 21
12	Digital Out 22	25	Digital Out 23
13	GND	Shield *	

Connector type: D-SUB, 25 pins
Gender: Female

* Shield is tied to the GND by a 0 Ohm resistor inside the PROPixx controller.

Digital input connector

The following table shows the digital input pin assignment.

Table 6 Digital Input

Pin	Description	Pin	Description
1	Digital In 0	14	Digital In 1
2	Digital In 2	15	Digital In 3
3	Digital In 4	16	Digital In 5
4	Digital In 6	17	Digital In 7
5	Digital In 8	18	Digital In 9
6	Digital In 10	19	Digital In 11
7	Digital In 12	20	Digital In 13
8	Digital In 14	21	Digital In 15
9	Digital In 16	22	Digital In 17
10	Digital In 18	23	Digital In 19
11	Digital In 20	24	Digital In 21
12	Digital In 22	25	Digital In 23
13	GND	Shield *	

Connector type: D-SUB, 25 pins
Gender: Female

* Shield is tied to the GND by a 0 Ohm resistor inside the PROPixx controller.

Audio In / MIC In / Audio Out

Audio equipment may be connected through these jacks with standard 1/8” (3.5 mm) stereo plugs. The following table shows the audio pin assignment for each jack.

***Audio IN, MIC In and Audio functionalities are available only with PROPixx full version (VPX-PRO-5001C)**

Audio In

Table 7 Audio In

Pin	Description
TIP	Audio In left
Ring	Audio In Right
Sleeve	GND
Shield *	

Connector type: Stereo 1/8” (3.5 mm)
Gender: Jack (female)

* Shield is tied to the GND by a 0 Ohm resistor inside the PROPixx controller.

Audio Out

Table 8 Audio Out

Pin	**Description**
TIP	**Audio Out left**
Ring	**Audio Out Right**
Sleeve	**GND**
Shield *	

* Shield is tied to the GND by a 0 Ohm resistor inside the PROPixx controller.

MIC In

Table 9 MIC In

Pin	Description
TIP	MIC In left
Ring	MIC In Right
Sleeve	GND
Shield *	

* Shield is tied to the GND by a 0 Ohm resistor inside the PROPixx controller.

Copyright © 2020 VPixx Technologies Inc. All Rights Reserved

Installation Example – Setup outside MRI Room

The following illustration details a typical MRI room setup for the PROPixx Projector when space limitations or other considerations prevent the PROPixx Projector from being installed in the MRI room. This example also uses a PROPixx Controller.

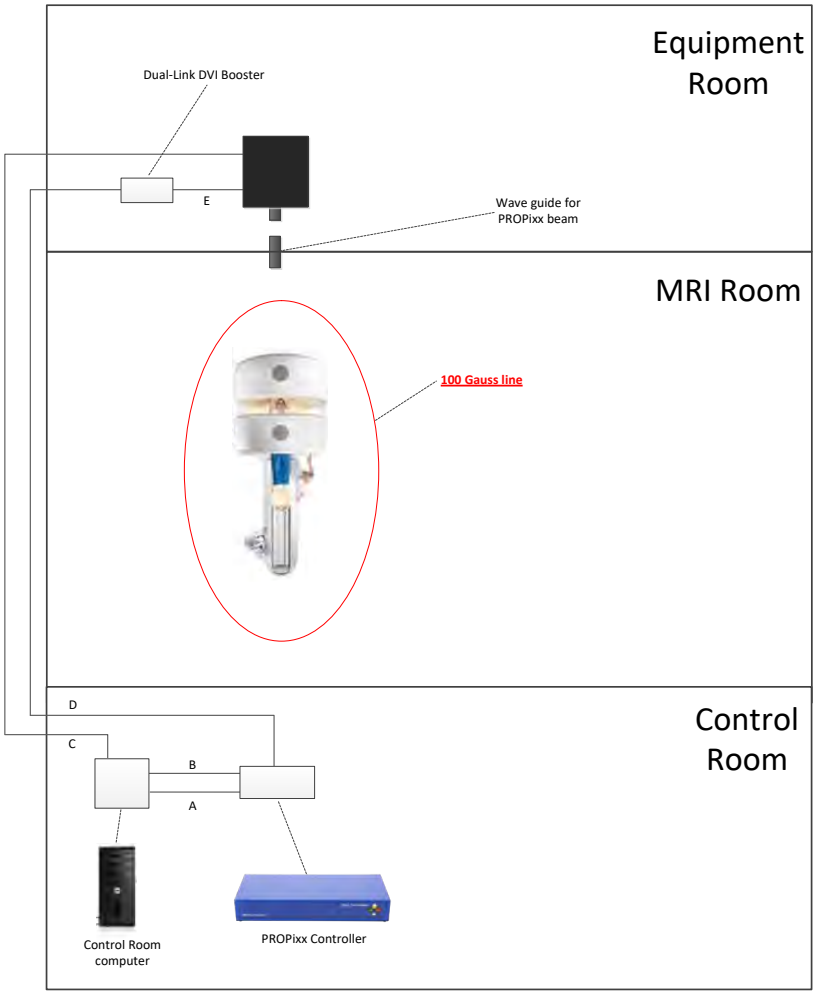

Figure 18 - PROPixx Projector in Equipment Room

Table 10 Connection Descriptions (including PROPixx in Equipment room)

Connection	Description
A	Dual-Link DVI cable from computer to PROPixx Controller (**DVI IN** connector)
B	USB cable from computer to PROPixx Controller
C	USB cable from computer to PROPixx Projector
D	Dual-Link DVI cable from PROPixx Controller (**DVI OUT to Projector** connector) to Dual-Link DVI Booster
E	Dual-Link DVI cable from Dual-Link DVI Booster to PROPixx Projector

Installation Steps

Refer to the following steps for additional information concerning the installation of your PROPixx Projector located in an equipment room adjacent to an MRI room. All connection references refer to Table 1.

1. Connect a Dual-Link DVI cable from the Control Room computer to the PROPixx Controller (**DVI IN** connector) (connection **A**)

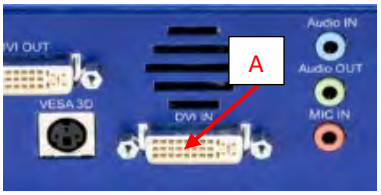

2. Connect a USB cable from the Control Room computer to the PROPixx Controller (connection **B**)

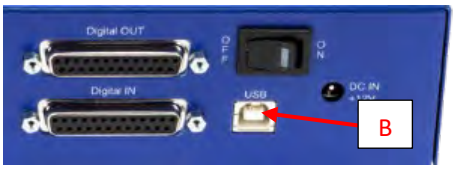

3. Connect a USB cable from the Control Room computer to the PROPixx Projector (connection **C**)
4. Connect a Dual-Link DVI cable from the PROPixx Controller to the Dual-Link DVI Booster located in the MRI room (connection **D**)
5. Connect a Dual-Link DVI cable from the Dual-Link DVI Booster to PROPixx Projector (connection **E**)

Copyright © 2020 VPixx Technologies Inc. All Rights Reserved

Maintenance and Calibration

Calibrating the PROPixx

Calibrating the PROPixx display requires the use of the X-Rite i1Display Pro.

	*For more information on calibrating the PROPixx, please refer to the **VPixx Products Application Guide** on MyVPixx.*

Specifications

General specifications

- Display resolution: 1920(H) x 1080(V) pixels
- Display type: Texas Instruments DMD 0.95”
- Aspect ratio: 16x9
- Illumination system: RGB LED
- Contrast: 10 000:1
- Brightness: 700 lumens
- Lamp life: 60 000 hours via solid state illumination
- Up to 12 bits of resolution on each of the RGB channels
- Up to 500 Hz refresh rate (RGB color)
- Up to 1440 Hz refresh rate (Greyscale)
- IR remote control

Video processing

- Video input: 1920 x 1080 pixels, 24 bits (Dual link DVI)
- Deterministic timing between reception of video signal and update of display pixels
- Completely bypasses all image processing “enhancements” prevalent in standard consumer projectors
- Multiple projectors can be synchronized, showing copies or subsets of original video

Analog to digital converter

- Number of channels: 16 (or 8 differential), on DB-25 connector
- Converter resolution: 16 bits
- Maximum sampling rate: 200 kSPS per channel
- Frequency programming modes:
    - Samples per second
    - Samples per video frame
    - Nanoseconds per sample
- Simultaneous sampling across all channels
- Input range: ±10 V
- Input impedance: $1.6*10^8$ Ω //3 pF
- Absolute maximum input tolerance: ±12 V

***ADC functionalities are available only with PROPixx full version (VPX-PRO-5001C)**

Copyright © 2020 VPixx Technologies Inc. All Rights Reserved

Digital to analog converter

- Number of channels: 4 on DB-25 connector
- Converter resolution: 16 bits
- Maximum sampling rate: 1 MSPS per channel
- Frequency programming modes:
    - Samples per second
    - Samples per video frame
    - Nanoseconds per sample
- Simultaneous output updates
- Output range: ±10 V
- Drive capability: ±25 mA, 250 mW per channel

***DAC functionalities are available only with PROPixx full version (VPX-PRO-5001C)**

Audio CODEC

- Audio line in, microphone in, speaker out, on 3.5 mm jacks
- Stereo microphone input amplifier resistance: 20 kΩ
- Microphone sampling rate: 96 kHz
- Programmable microphone bias voltage range: 2.0 V to 3.1 V
- Stereo DAC sampling rate 96 kHz

***Audio CODEC functionalities are available only with PROPixx full version (VPX-PRO-5001C)**

Digital input

- Number of digital inputs: 24 on db-25 connector
- Input termination: >20 kΩ pullup to 3.3 V
- Input tolerance: 5 V

Digital output

- Number of digital outputs: 24 on db-25 connector
- Output drive stage: 5 V through 25 Ω series resistor
- Maximum output current:
    - Source: 15 mA
    - Sink: 12 mA

Power (projector unit)

- Power consumption: 250 W
- Input voltage: 48 VDC – 5.21 A
- International AC adaptor input: 90 VAC – 264 VAC (47 Hz – 63 Hz)

Power (controller unit)

- Power consumption: 30 W
- Input voltage: 12 VDC – 2.5 A
- International AC adaptor input: 90 VAC – 264 VAC (47 Hz – 63 Hz)

Mechanical mounting (projector unit)

- Front/rear table
- Front/rear ceiling

Software

Software support includes a low-level ANSI C API as well as Psychtoolbox MATLAB / Octave and Python libraries for Mac OS X, Windows 7, Windows 8 and Linux. In addition, the PROPixx is directly supported by the VPixx high-level application.

Copyright © 2020 VPixx Technologies Inc. All Rights Reserved

Warranty

The PROPixx is warranted against manufacturing defects in materials and workmanship for two years for parts and labor from the date of purchase.

VPixx Technologies Inc.
630 Clairevue West suite 301
Saint-Bruno, Qc
Canada, J3V 6B4

TEL/FAX: (514) 328-7499
TOLL FREE: (844) 488-7499 (USA/CANADA)
EMAIL: sales@vpixx.com